1

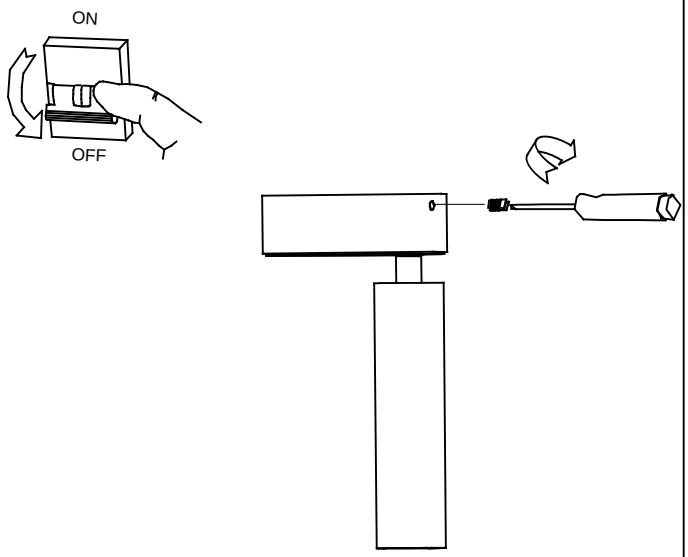

2

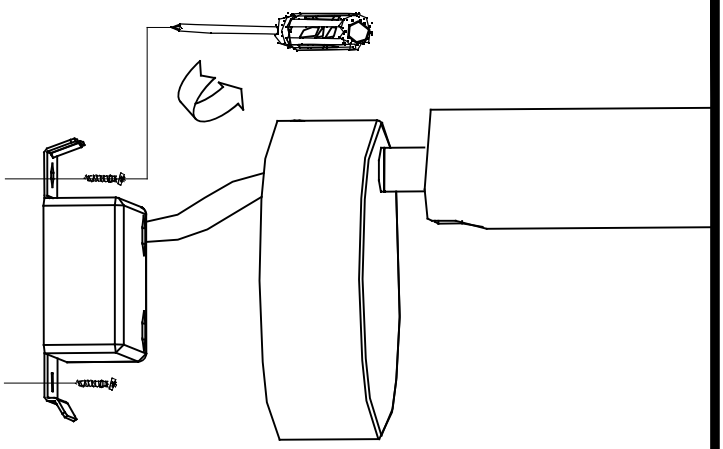

3

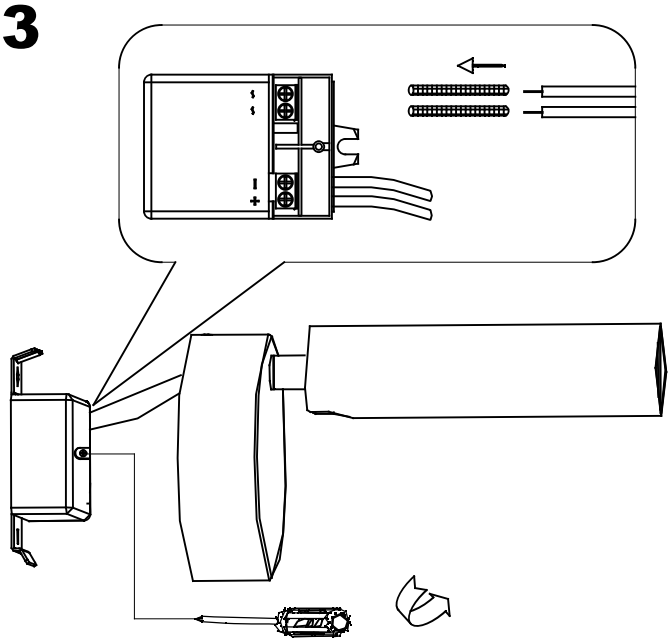

4

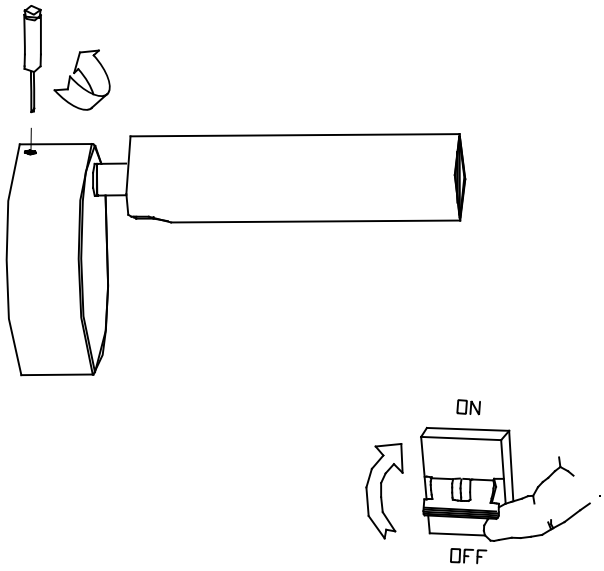

5

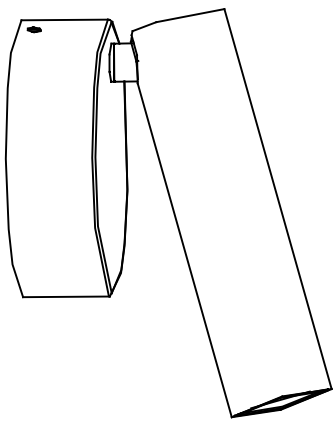

X1

LED 7.5W