Levels

FLOOR

LedsC4



1

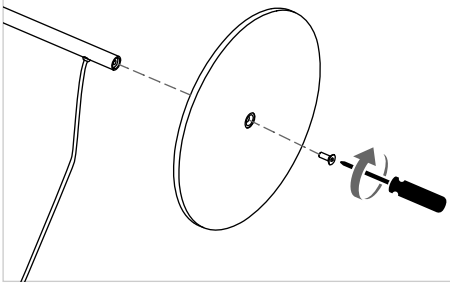

2

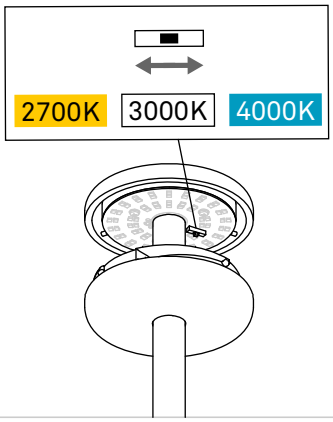

3

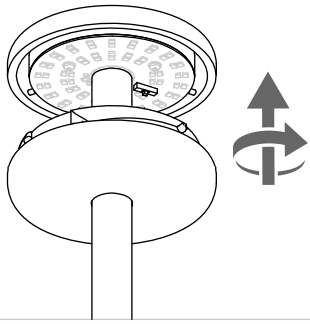

4

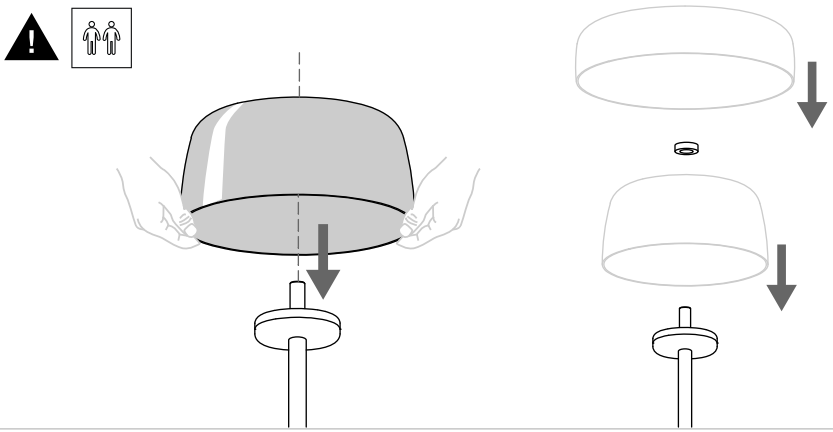

5

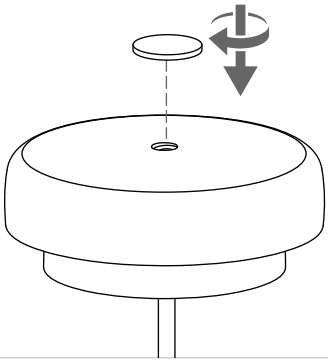

6

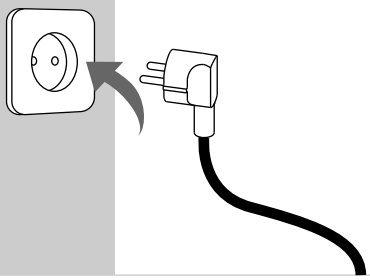

7

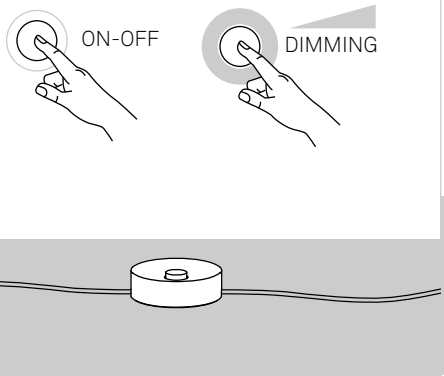

8

