LEDS C4

KHOI / 00-4037

1

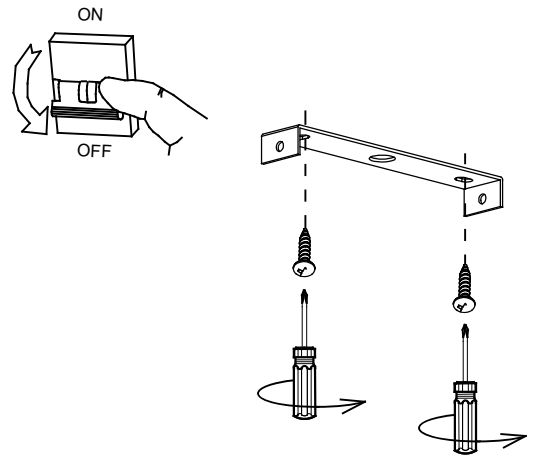

2

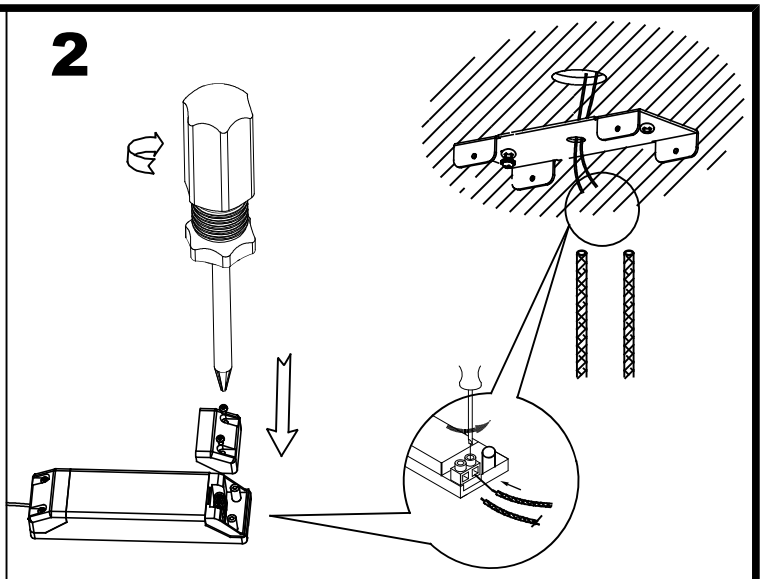

3

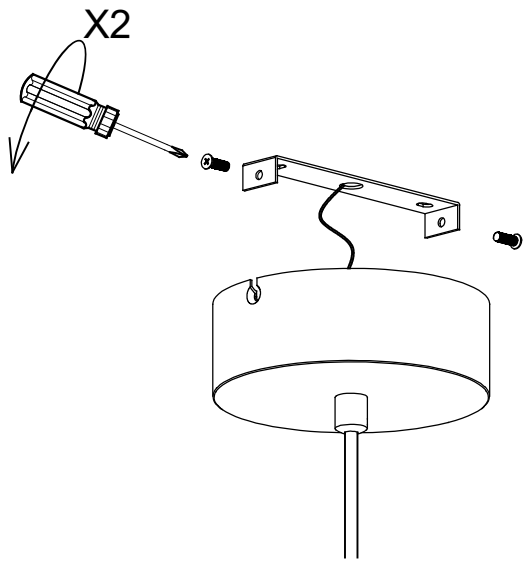

4

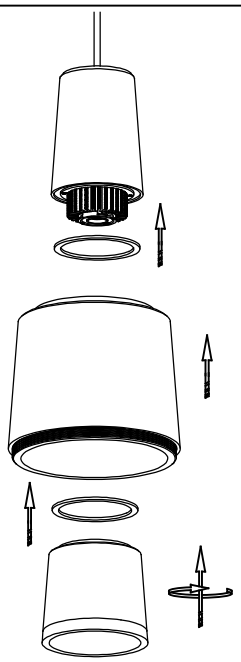

5

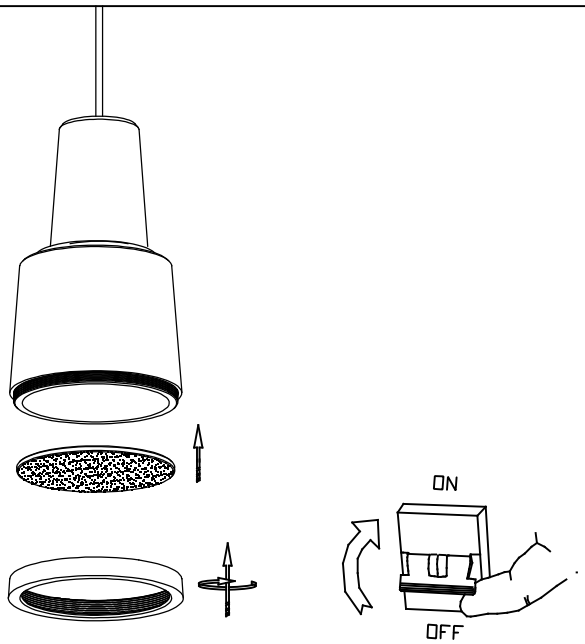

6

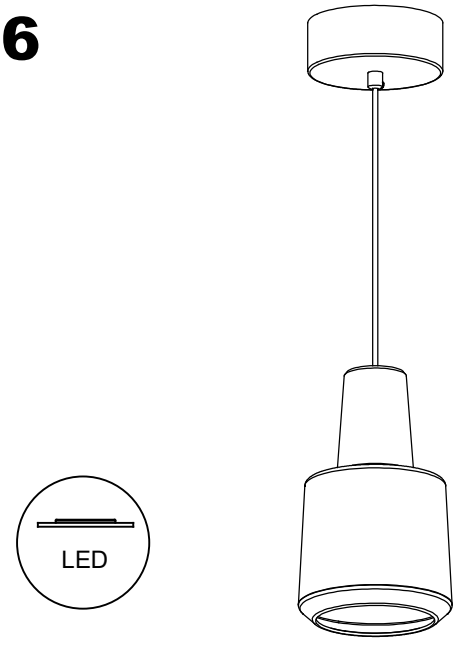

Nov/12/2018